TECHNICAL DATA

561001SWW

LED FLOODLIGHT WITH SENSOR 10W 3000K 120°

Outdoor LED floodlight with PIR sensor, 10W power and 850 lm luminous flux. 120° symmetrical optical opening with 3000K colour temperature. IP65 protection rating against external elements and IK08 mechanical impact resistance rating. Black finish aluminium body.

PRODUCT SPECIFICATIONS

Item code:	561001SWW
Description:	Outdoor LED floodlight with motion sensor
EAN13 code:	8436568444536

ELECTRICAL DATA

Power:	10w
Voltage:	220-240vac
Frequency:	50-60 Hz
Power factor:	0,7
Dimmable:	NOT
Electrical insulation class:	CLASS I
Connection:	L/N+TT

LUMINOUS DATA

Color temperature:	3000K
Luminous efficiency:	85lm/w
Lumens:	850lm
LED chip brand:	San'an
LED chip model:	SMD 2835
Beam angle:	120°
Luminous distribution:	Symmetrical
Color rendering index:	>80
Standard desviation of colour matching:	<6
Luminous flux maintenance:	L90B10
Flicker index:	≤1,0
SVM (Stroboscopic Visibility Measure):	≤0,4
Flicker free:	YES

MOTION SENSOR DATA

Sensor type:	**PIR**
Work mode:	**ON/OFF Function**
Configuration options:	**YES**
Detection angle:	**150º**
Hold time:	**7sg- 10min**
Light sensor:	**10-2000lux**
Detection range:	**Maximum 6 mts**
Mounting height:	**Maximum 6 mts**

TECHNICAL DATA

Protection rating:	**IP65 (Dust-tight equipment and protected against water jets)**
Impact rating:	**IK08 (5J)**
Operating temperature:	**-25º~45º**
Mounting type:	**Surface**

AVERAGE LIFESPAN

Working hours:	**35000 hrs**
Switching cycles:	**25000 ON/OFF**

PHYSICAL DATA

Housing

Material:	**Aluminum**
Finish:	**Black**

Type cover

Material:	**Glass**
Finish:	**Transparent**

Weight

Weight:	**0,35 kg**

ENERGY EFFICIENCY 2023(UE-2019/2015) F

DIMENSIONS

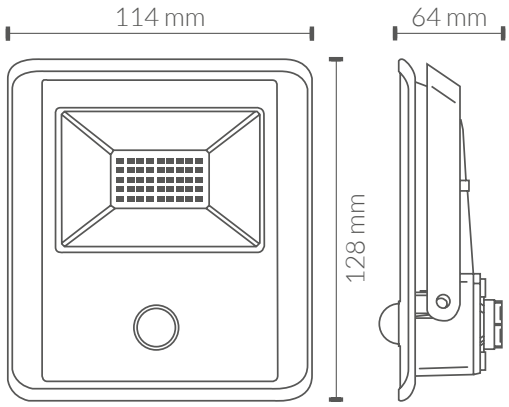

LUMINOUS INTENSITY DISTRIBUTION CURVE

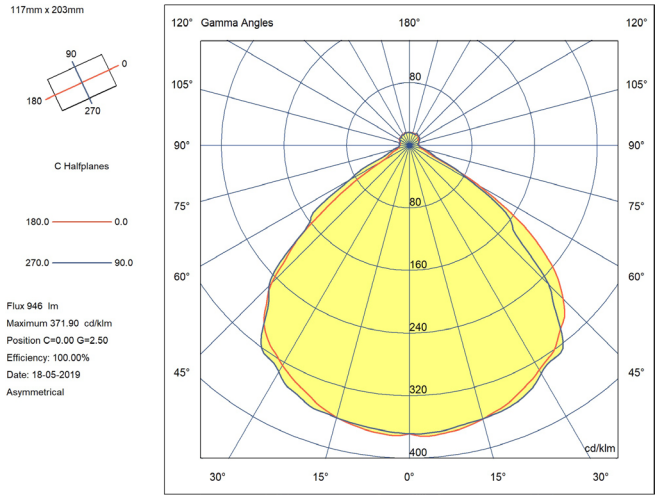

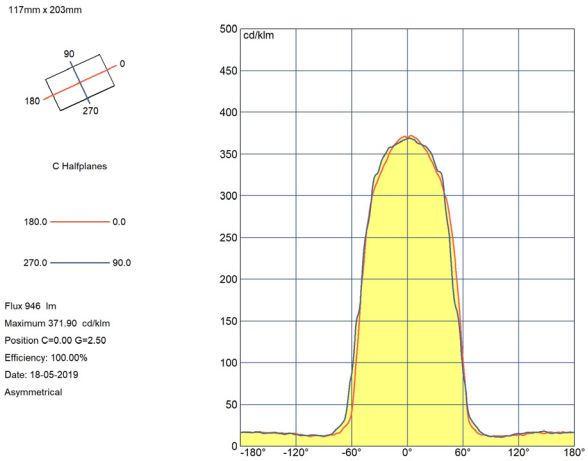

CERTIFICATIONS

CE & ROHS

EMC directive 2014/30/EU ELECTROMAGNETIC COMPATIBILIT

EN IEC 55015	Limits and methods of measurement of radio disturbance characteristics of electrical lighting and similar equipment.
EN IEC 61000-3-2	Electromagnetic compatibility (EMC) - Part 3-2: Limits - Limits for harmonic current emissions (equipment input current =16 A per phase).
EN 61000-3-3	Electromagnetic compatibility (EMC) - Part 3-3: Limits - Limitation of voltage changes, voltage fluctuations and flicker in public low-voltage supply systems, for equipment with rated current <= 16 A per phase and not subject to conditional connection.
EN 61547	Equipment for general lighting purposes - EMC immunity requirements.

LVD directive 2014/35/EU LOW VOLTAGE

EN 60598-2-5	Luminaires. Part 2-5: Particular requirements. Floodlights..
EN 60598-1	Luminaires. Part 1: General requirements and tests.
EN 62493	Assessment of lighting equipment in relation to human exposure to electromagnetic fields.

RoHS Directive 2011/65/EU and Delegated Directive (EU) 2015/863
Determination of Certain Substances in Electrotechnical Products.

IEC62321-1	**IEC 62321-3-1**
IEC 62321-4	**IEC 62321-5**
IEC 62321-6	**IEC 62321-7-2**
IEC 62321-8	