TECHNICAL DATA

71403070PAR

GADIR STREET LUMINAIRE DIMMABLE 40W 70°X150° PC AMBER – AMBER WHITE

Gadir dimmable Street Luminaire for public lighting, 40W power and 3400lm luminous flux. Equipped with 96 pcs Lumileds SMD2835 LED chips and MOSO X6 dimmable driver. Asymmetrical 70° × 150° beam angle and PC Amber – Amber white colour temperature. Protection rating IP66 and mechanical impact resistance rating IK08 vandal-resistant. Die-cast aluminium body with RAL 9007 grey finish. Polycarbonate lenses. Adjustable mounting arm for installation on poles or columns.



110V 240V
MULTITENSIÓN

PRODUCT SPECIFICATIONS

Item code:	**71403070PAR**
Description:	**Street luminaire for public lighting Gadir**
EAN13 code:	

ELECTRICAL DATA

Power:	**40w**
Voltage:	**90-305vac**
Frequency:	**50/60 Hz**
Power factor:	**0,9**
Dimmable:	**YES**
Driver model:	**MOSO**
Dimming:	**0-10vac, PWM, DIM TO OFF**
Control method:	**Offline Programming**
Timer:	**YES**
Driver protections:	**OVP, SCP, OPP, OTP**
Overvoltage protection:	**6kv**
Surge protection option:	**10kv**
Electrical insulation class:	**CLASS I**
Connection:	**L/N+TT**

LUMINOUS DATA

Color temperature:	**PC Amber – Amber white**
Luminous efficiency:	**85 lm/w**
Lumens:	**3400lm**
LED chip brand:	**Lumileds**
LED chip model:	**SMD 2835**
Number of LED chips:	**96 pcs**

Beam angle:	**100°x130°**
Light distribution:	**Asymmetric**
Color rendering index:	**>80**
Luminous maintenance factor:	**L95B10**

TECHNICAL DATA

Protection rating:	**IP66 (Dust-tight and protected against powerful water jets)**
Impact rating:	**IK08 (5J vandal-resistant)**
Operating temperature:	**-20°~50°**
Mounting type:	**Surface**
Mounting method:	**Vertical position support for column mounting** **Horizontal position support for pole mounting**
Mounting device:	**Inner diameter D62 mm**
Tilt angle:	**15°**

AVERAGE LIFESPAN

Lifetime hours:	**60000 hrs**
Switching cycles:	**40000 ON/OFF**

PHYSICAL DATA

Luminaire body

Material:	**Die-cast aluminum**
Finish:	**Grey - RAL 9007**

Lenses

Material:	**Polycarbonate**
Finish:	**Transparent**

Weight

Weight:	**2,10 kg**

ENERGY EFFICIENCY 2023 (EU-2019/2015) D

DIMENSIONS

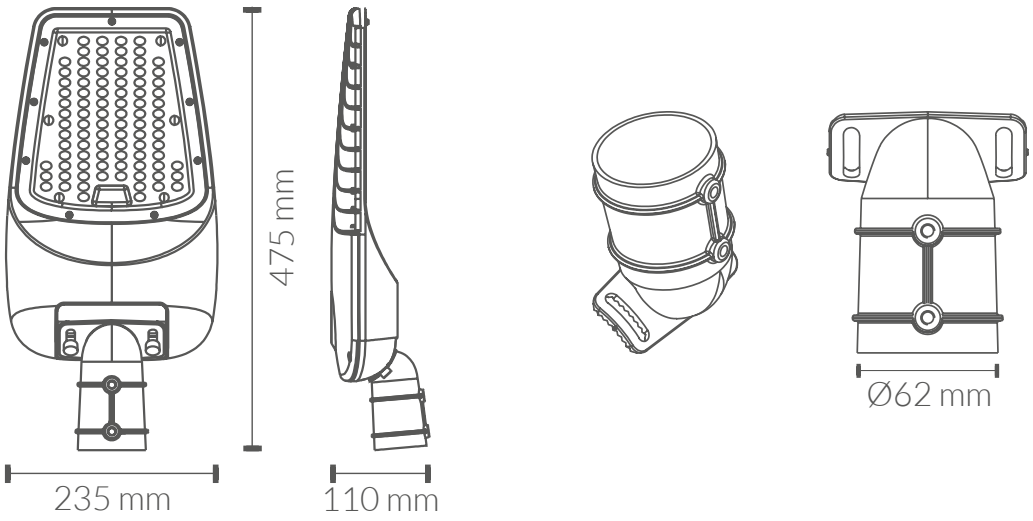

LUMINOUS INTENSITY DISTRIBUTION CURVE

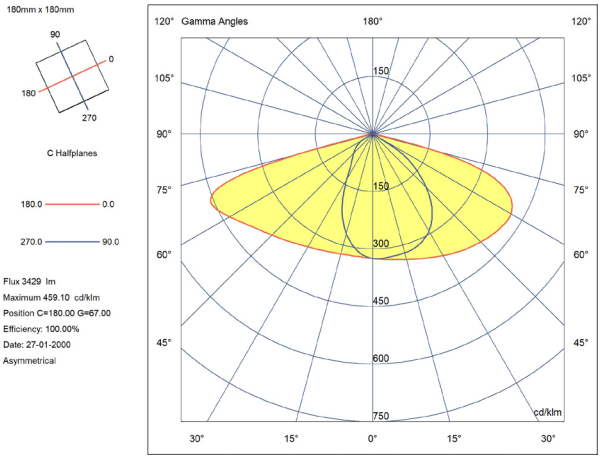

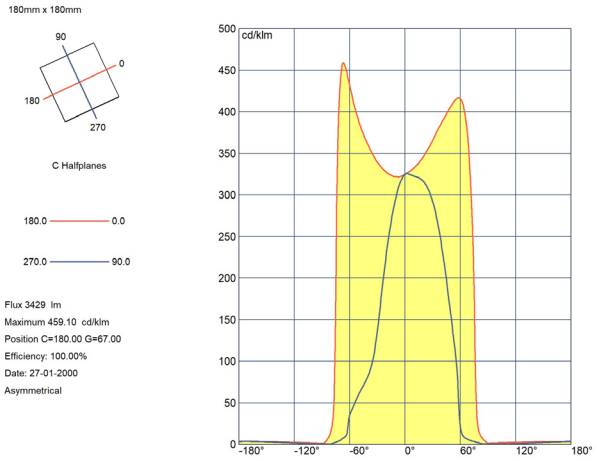

CERTIFICATIONS

CE & ROHS

EMC directive 2014/30/EU ELECTROMAGNETIC COMPATIBILIT

EN IEC 55015	Limits and methods of measurement of radio disturbance characteristics of electrical lighting and similar equipment.
EN 61547	Equipment for general lighting purposes - EMC immunity requirements.
EN IEC 61000-3-2	Electromagnetic compatibility (EMC) - Part 3-2: Limits - Limits for harmonic current emissions (equipment input current =16 A per phase).
EN 61000-3-3	Electromagnetic compatibility (EMC) - Part 3-3: Limits - Limitation of voltage changes, voltage fluctuations and flicker in public low-voltage supply systems, for equipment with rated current <= 16 A per phase and not subject to conditional connection.

LVD directive 2014/35/EU LOW VOLTAGE

EN IEC60598-1	Luminaires - Part 1: General requirements and tests
EN 60598-2-5	Luminaires - Part 2-5: Particular requirements - Floodlights

RoHS Directive 2011/65/EU and Delegated Directive (EU) 2015/863
Determination of Certain Substances in Electrotechnical Products.

IEC 62321-4

IEC 62321-5

IEC 62321-6

IEC 62321-7-2

IEC 62321-8

CE RoHS